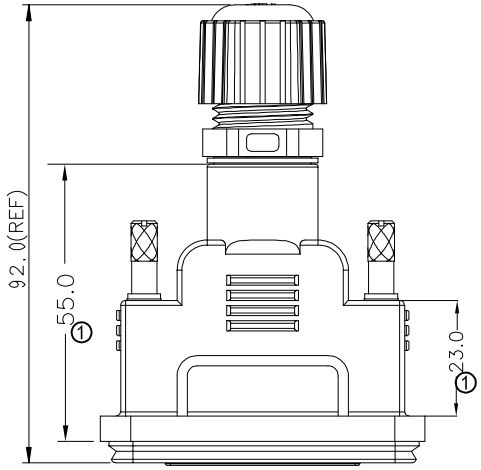

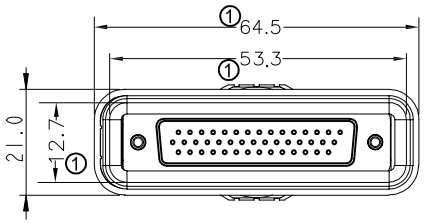

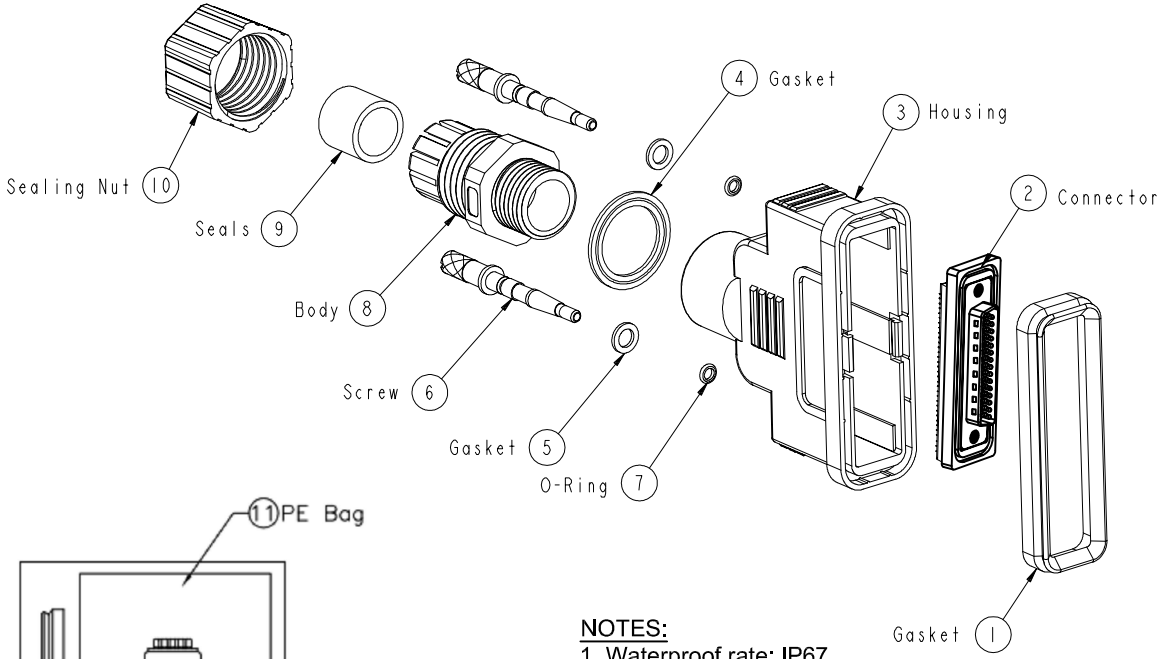

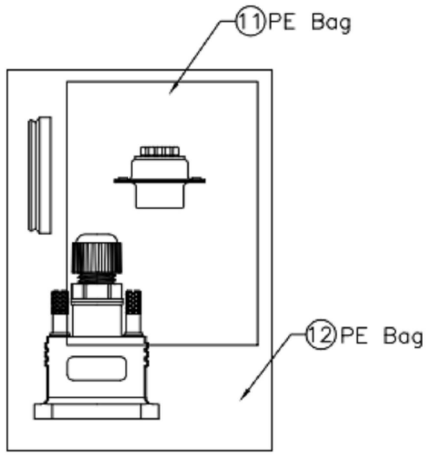

NOTES:
1. Waterproof rate: IP67
2. Gasket: EPDM Black
3. Housing: ABS Black
4. Screw: Brass
5. O-ring: Silicone Clear
6. Body: Nylon Black
7. Sealing Nut: Nylon Black
8. Connector: HD-Sub 44Pin Male, pin in full gold plated ①
9. Seals for Cable OD:⌀6.0mm-⌀10.0mm
10. One Set Unassembled in One Zipper Bag

RoHS compliant
Unit: mm

Scale	Free						Date	Name	Customer-No.
TOLERANCE						Drawn	22.04.2014	Joanna	
						Approved	03.04.2018	Amy	ASSMANN WSW-No. A-HDS44-HOOD-WP
UNIT	±0.5								
DIM	TOL	①	Cancel "A" logo&correct dimensions	03.04.2018	Amy				Drawing-No. ASS 6264 CO rev01
		⓪	Drawn	22.04.2014	Joanna				
Angle	TOL	Id.	Modification	Date	Name				Replace / Sheet

ASSMANN WSW components