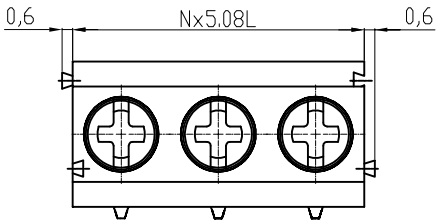

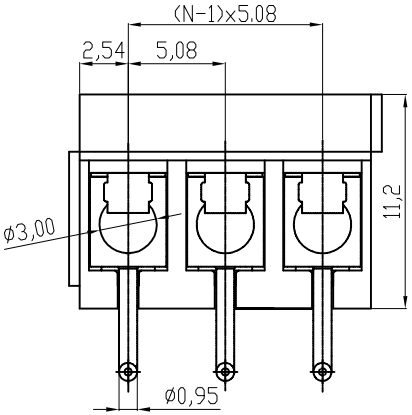

N=Number of poles

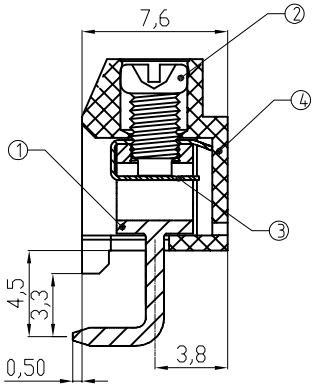

Material

①Terminal body(metal housing): Brass(CuZn),Tin plated
②Terminal screw: Steel Zinc plating "+/-" slot type
③Wire guard:Stainless steel
④Insulator (housing): Thermoplastic (UL94V-0) , GREEN

Electrical cULus

Voltage rating: 300V
Current rating: 15A
Wire range:
Solid wire(AWG): 14-24
Stranded wire(AWG): 14-24
Torque(Lb-In): 3.2
Screw: M2.6
Wire strip length: 5-6mm
Withstanding Voltage: 1.6KV
Operating temperature: -40°C to +115°C
Soldering temperature: 250°C±10°C/5 Sec
Safety Approval: c UL us

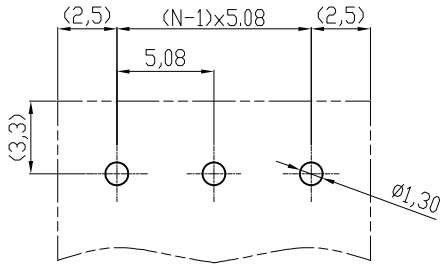

RECOMMENDER PCB LAYOUT

RoHS compliant

① UL File No.: E349947

Scale	1:1					Date	Name	Customer-No.
TOLERANCE					Drawn	19.04.2010	Alex	
X.	±0.50				Approved	07.04.2016	Winnie	ASSMANN WSW-No. A-TB508-T9xx
X.X	±0.30							
X.XX	±0.10							
DIM	TOL	①	Update to new drawing and add UL	07.04.2016	Winnie			Drawing-No. ASS 4156 CO rev01
X.°	±1°	⓪	Drawn	19.04.2010	Alex			
								Replace Sheet
Angle	TOL	Id.	Modification	Date	Name			

ASSMANN WSW components