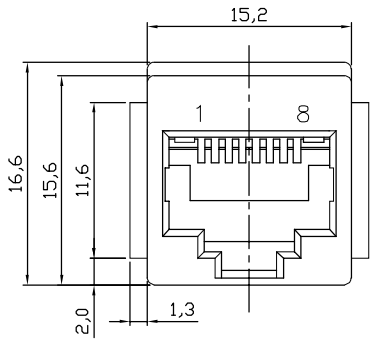

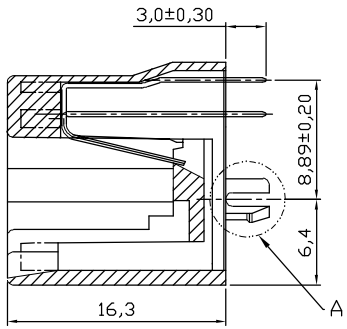

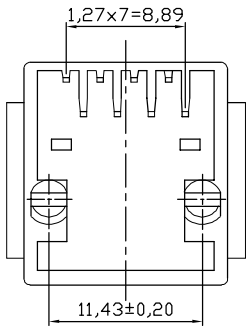

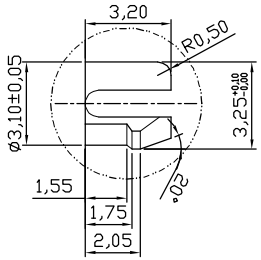

Detail A
2 : 1

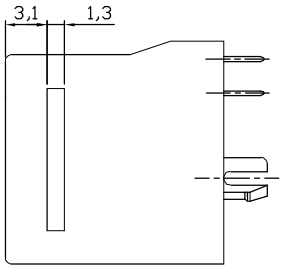

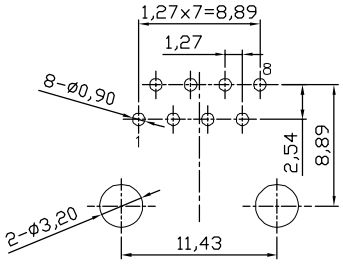

PC Board Layout
Component Side Shown

NOTES:
Mechanical:
1. Housing material : PBT UL94V-0
Color: Black
2. Contact material: Phosphor Bronze t=0.35mm
④③ 3. Contact plating: 6u" Gold on contact are
100~200u" Tin on solder area
all over 30~50u" Nickel
4. Operating Life: 750 Cycles min.
5. PCB Retention Pre-solder: 1 LB min.
6. PCB Retention Post-solder: 10 LBS min.

Electrical:
1. Voltage Rating: 125VAC.
2. Current Rating: 1.5AMP.
3. Contact Resistance: 30mΩ max.
4. Insulation Resistance: 1000 MΩ min. @ 500 VDC
5. Dielectric Strength: 1000 VAC 60Hz, 1 min.

Environmental:
1. Storage: -40°C To +85°C
2. Operation: -40°C~+85°C
③ 3. Wave Soldering Temp: 200~220°C(5~10S)

③ Packing: 100pcs/Tray, 3200pcs/Carton

Frequence	Near-End Cross Talk dB, MIN.	Return Loss dB, MIN.
1.0 MHZ	65.0	23.0
4.0 MHZ	65.0	23.0
8.0 MHZ	62.0	23.0
10.0 MHZ	60.0	23.0
16.0 MHZ	56.0	23.0
20.0 MHZ	54.0	23.0
25.0 MHZ	52.0	14.0
31.25 MHZ	50.0	14.0
62.5 MHZ	44.0	14.0
100.0 MHZ	40.0	14.0

RoHS compliant
Unit:mm

File No.: E345352

Scale	Free
TOLERANCE	
X.X	±0.20
X.XX	±0.15
X.XXX	±0.10
DIM	TOL
Angle	±5°

Id.	Modification	Date	Name		Date	Name
⑤	Add UL File No.	09.03.2016	S.Bölling	Drawn	27.05.2013	Amy
④	Update the contact plating	25.08.2015	Amy	Approved	25.08.2015	Amy
③	Update	27.05.2013	Amy			
②	Change material to PBT Change housing color to Black	22.06.2009	Dean			
①	Drawn	13.10.2008	N.Schulz			

ASSMANN WSW components

Customer-No.

ASSMANN WSW-No. A-20142

Drawing-No. ASS 0703A CO

rev05

Replace

SHEET