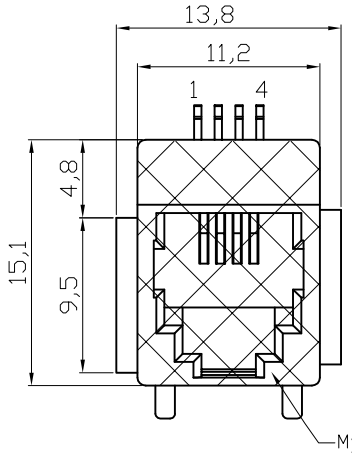

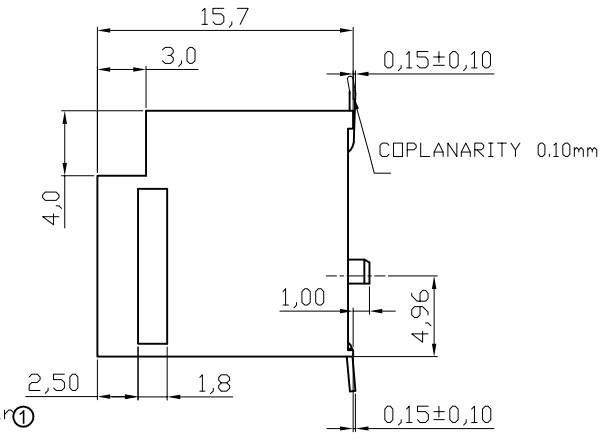

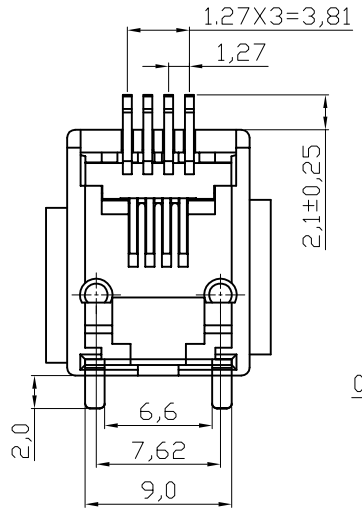

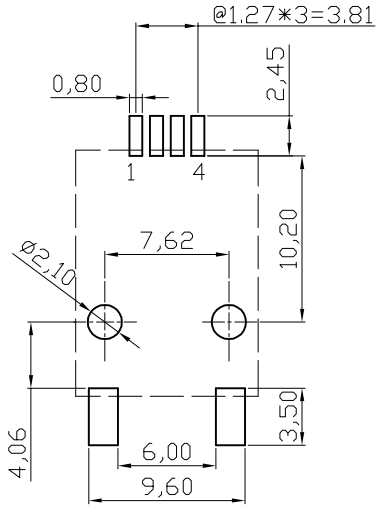

PCB LAYOUT
COMPONENT SIDE SHOWN

NOTES:

ELECTRICAL:

1. VOLTAGE RATING : 125 VAC RMS.
2. CURRENT RATING : 1.5 AMP.
3. CONTACT RESISTANCE : 35 MILLIOHMS MAX.
4. INSULATION RESISTANCE : 1000 MEGOHMS MIN. @ 500 VDC.
5. DIELECTRIC STRENGTH : 1000 VAC RMS 60Hz, 1MIN.

MECHANICAL:

1. HOUSING MATERIAL : HIGH TEMP. UL94V-0 BK.
2. CONTACT MATERIAL : PHOSPHOR BRONZE t=0.35mm.
3. PLATING : 6u" GOLD PLATING OVER NICKEL.
4. OPERATING LIFE : 750 CYCLES MIN.
5. PCB RETENTION POST-SOLDER: 10 LBS MIN.

ENVIRONMENTAL:

1. STORAGE : -40°C TO +85°C.
2. OPERATION: -40°C TO +85°C.
3. IR REFLOW SOLDERING TEMPERATURE: 255°C TO 265°C (5~10 SECONDS).

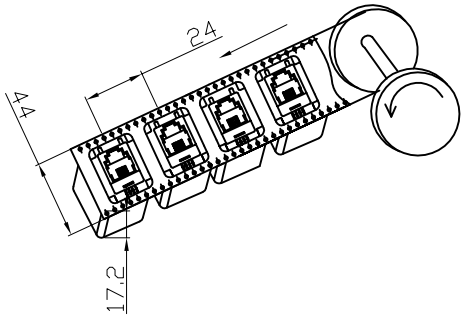

RoHS compliant

Unit:mm

File No.: E345352

Scale	Free
TOLERANCE	
.X	±0.20
.XX	±0.15
.XXX	±0.10
DIM	TOL
Angle	±5°

Id.	Modification	Date	Name
①	Add Mylar	29.03.2017	Amy
⓪	Drawn	03.02.2012	Lucas

	Date	Name
Drawn	03.02.2012	Lucas
Approved	29.03.2017	Amy

ASSMANN wsw components

Customer-No.

ASSMANN WSW-No.
AMJ-144-1001100-N

Drawing-No.
ASS 4663 CO

rev01

Replace

Sheet

kk413