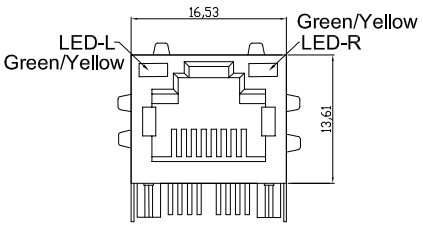

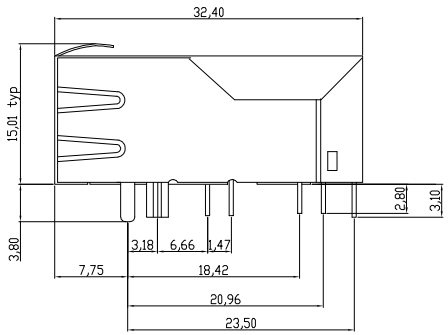

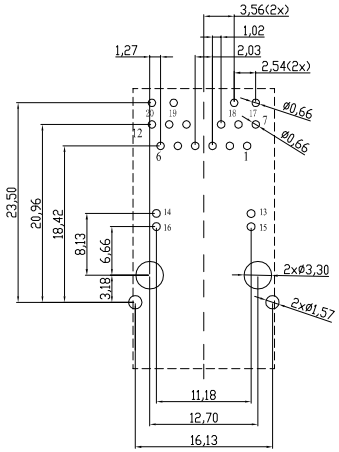

Recommended PCB Layout
Component side View

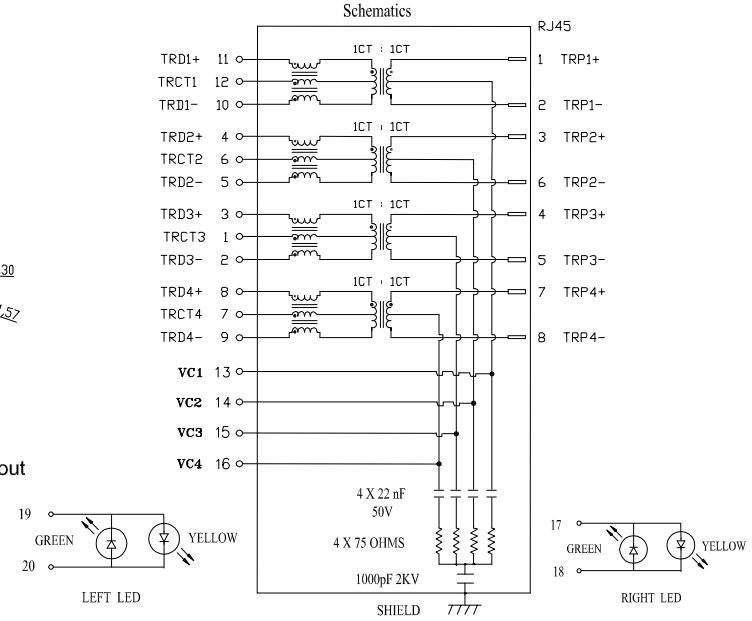

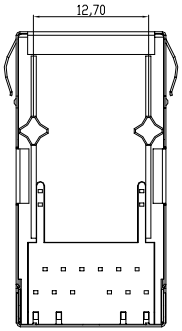

Feature:
1. Compliant with IEEE802.3af standard including 350mH OCL with 8mA DC Bias
2. 350mA balanced DC line current capability
3. Designed for power over ethernet (POE) enabled Switch / Router / Hub applications
4. Housing: PBT+30%GF UL94V-0
5. Contact: Phosphor Bronze C5191
   30u" gold on contact area
6. Input Terminal: Brass
7. Metal shielding: Brass C2680 Nickel plated
8. Operating temperature: 0~70 °C
9. Storage temperature: -40°C ~ +85°C
10 Packing: Tray

1. Turns Ratio:
   @100KHz,0.1V:1:1±3%
2. Insertion Loss:
   @1~80MHz: -1.0dB max.
   @100MHz: -1.2dB max.
3. Return Loss:
   @1~30MHz: -20dB min.
   @60~80MHz: -12dB min.
4. Common Mode Rejection:
   @1~100MHz: -30dB min.
   @200MHz: -20dB min.
5. Crosstalk:
   @1~100MHz: -30dB min.
6. OCL: @100KHz, 0.1V
   8mADC: 350uH min.
7. Hi-Pot: 1200VDC, 1mA, 3 sec

RoHS compliant
Unit: mm

Scale	Free
TOLERANCE	
X.X	±0.38
X.XX	±0.25
X.XXX	±0.13
DIM	TOL
Angle	TOL

Id.	Modification	Date	Name
0	Drawn	08.05.2015	Amy

	Date	Name
Drawn	08.05.2015	Amy
Approved	08.05.2015	Amy

ASSMANN wsw components

Customer-No.

ASSMANN WSW-No.
AMJH-8-T-R-P43

Drawing-No.
ASS 6833 CO

rev00

Replace

Sheet

SV3854