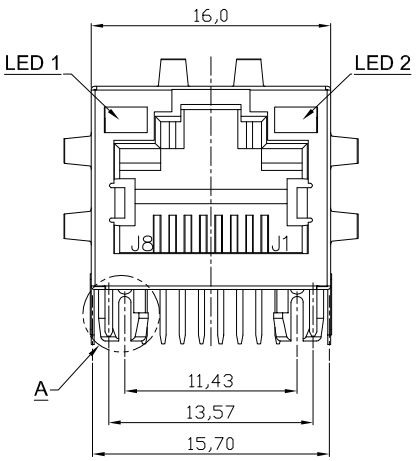

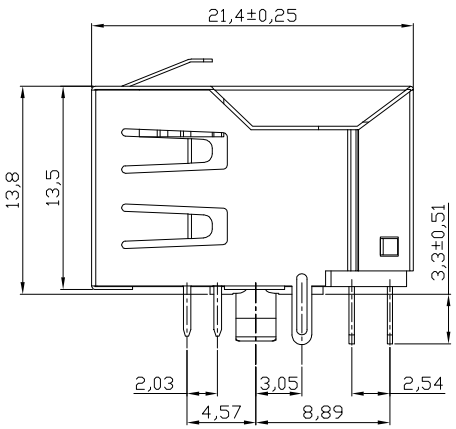

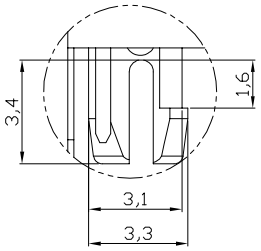

Detail A(2:1)

Schematic:

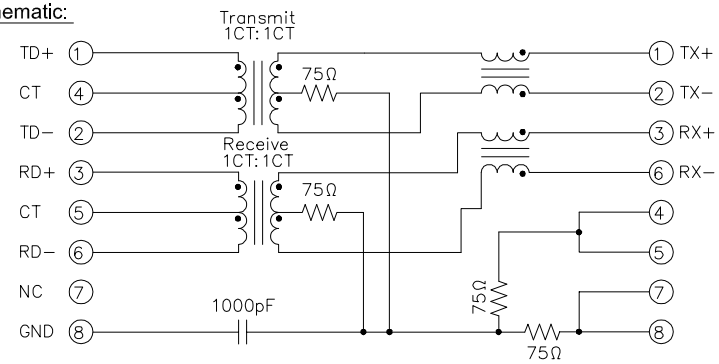

LED 1	LED 2
GREEN	YELLOW
L3 — L4	L1 — L2

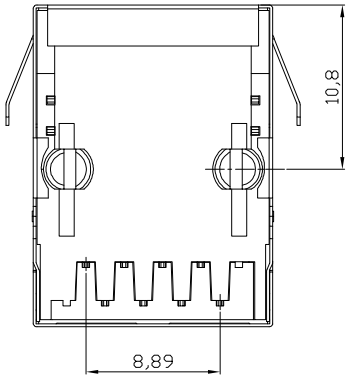

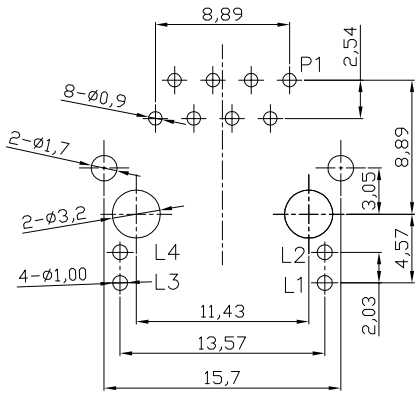

PC Board Layout
Component Side Shown

NOTES:
Electrical Specifications:
1. Inductance At 100 KHz, 100 mV 8mADC Bias: 350 uH min.
2. Leakage Inductance 0.3 uH max. @100KHz 100mV
3. Insertion Loss: 1.1 dB max. @1-100 MHz
4. Return Loss: 18dB min. @1-30MHz
   16dB min. @30-60MHz
   12dB min. @60-80MHz
5. Cross Talk: 30dB min. 1-100MHz
6. Common Mode Rejection: 30dB min. @1-100MHz
7. Isolation Voltage @60Hz: 1500Vrms(Input to Output) 60 sec.
8. Voltage Rating: 30VDC
9. Current Rating: 8mADC
10. DCR (P1-P2,P3-P6): 0.9Ohms max.

Mates with Modular Plug Conforming to
TIA-1096-A

Mechanical:
1. Housing Material: High Temp. UL94V-0
   Color: Black
2. Contact Material: Phosphor Bronze
   T=0.30mm
3. Plating: 6u" Gold on contact area
   100~200u" Tin on solder area
   all over 30~80u" Nickel
4. Shield Material: Brass T=0.20mm
5. Shield Plating: 50u" Nickel plating
6. Operating Life: 1000 cycles min.
7. PCB Retention Pre-solder: 1 Lb min.
8. PCB Retention Post-solder: 10 Lbs min.

Environmental:
1. Storage: -40°C to +85°C
2. Operation: 0°C to +70°C

Packing: Tray

RoHS compliant
Unit: mm

Scale	Free
TOLERANCE	
.X	±0.20
.XX	±0.15
.XXX	±0.10
DIM	TOL
Angle	±5°

Id.	Modification	Date	Name
0	Drawn	30.11.2015	Amy

	Date	Name
Drawn	30.11.2015	Amy
Approved	30.11.2015	Amy

ASSMANN wsw components

Customer-No.

ASSMANN WSW-No.
AMJH-8-T-R-P66

Drawing-No.
ASS 7064 CO

rev00

Replace

Sheet