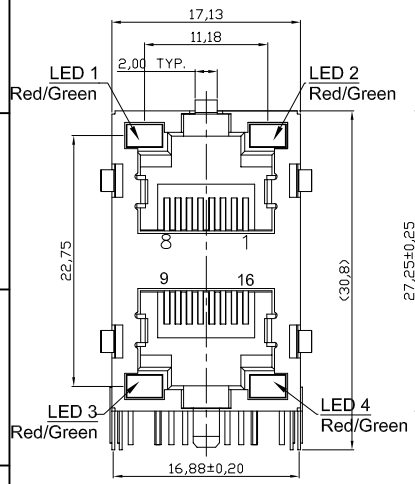

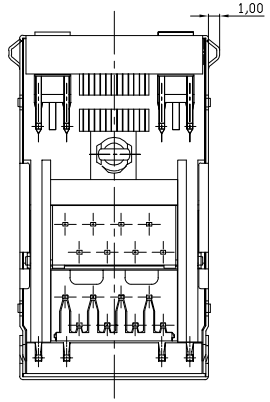

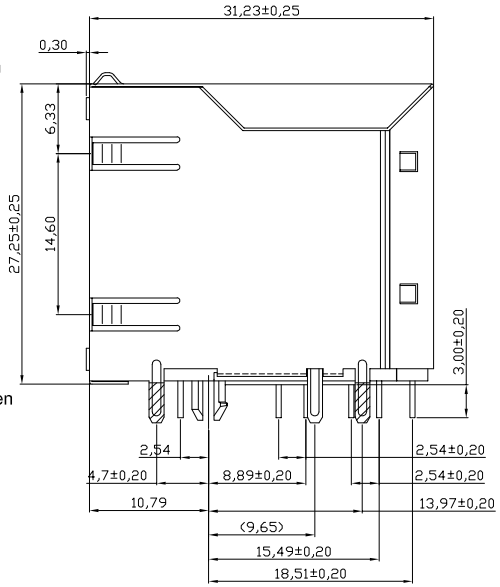

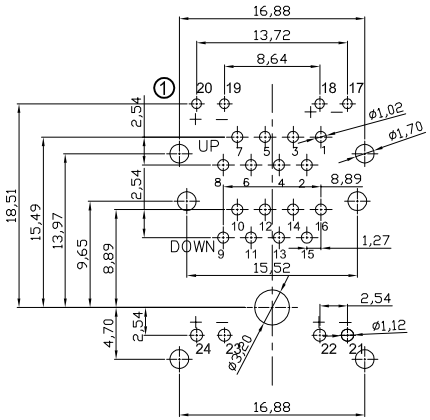

PCB Layout
Component Side Show

Notes:

Electrical:
1. Voltage Rating: 125VAC RMS
2. Current Rating: 1.5AMP
3. Contact Resistance: 50mΩ max.
4. Insulation Resistance: 1000MΩ min. at 500VDC
5. Dielectric Strength: 1000 VAC 60Hz 1 min.
6. Operating Life: 750 cycles min.

Mechanical:
1. Housing material: Glass Filled PBT UL94V-0 Black
2. Shield material: Brass C2680-H T=0.25mm
   30~50u" Nickel plated
3. Contact material: Phosphor Bronze T=0.35mm
4. Contact plating: 50u" Gold on contact area
   100~200u" Tin plating on solder area
   all over 50~80u" Nickel plated
5. PCB Retention pre-solder: 1 LB min.
6. PCB Retention post-solder: 10 LBS min.
7. LED Size: 3.2*2.0*4.0, P=2.54mm

Environmental:
1. Storage: -40°C to +85°C
2. Operation: -40°C to +85°C

Mates with modular plug conforming to FCC Part 68, Subpart F.

Packing: Tube

①

LED 1	LED 2
RED 20 ← → 19 GREEN	RED 18 ← → 17 GREEN
LED 3	**LED 4**
RED 24 ← → 23 GREEN	RED 22 ← → 21 GREEN

RoHS compliant
Unit: mm

Scale	Free
TOLERANCE	
.X	±0.20
.XX	±0.15
.XXX	±0.10
DIM	TOL
Angle	±5°

Id.	Modification	Date	Name
①	update to Bi-LED	20.12.2016	Amy
⓪	Drawn	10.12.2015	Amy

	Date	Name
Drawn	10.12.2015	Amy
Approved	20.12.2016	Amy

ASSMANN WSW components

Customer-No.

ASSMANN WSW-No. AMJH-8-T-R-P77

Drawing-No. ASS 7097 CO

rev01

Replace

Sheet

SV4275