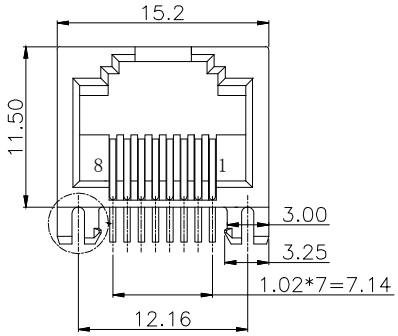

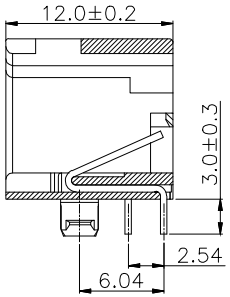

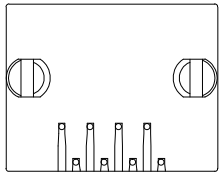

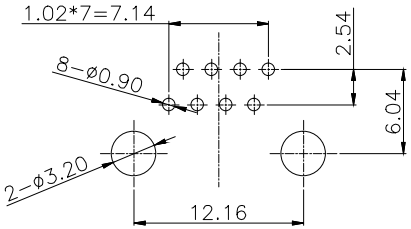

PC BOARD LAYOUT

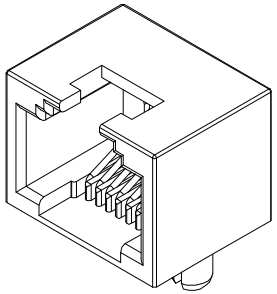

Notes:

Electrical:

1. Voltage Rating: 125VAC
2. Current Rating: 1.5AMP
3. Contact Resistance: 30mΩ max.
4. Insulation Resistance: 500MΩ min. @ 500VDC
5. Dielectric Strength: 1000VAC 50Hz,1 min.

Mechanical:

1. Housing Material: Glass Filled Polyseter UL94V-0 Black
2. Contact Material: Phosphor Bronze Ø0.46mm
3. Contact Plating: Gold over Nickel
4. Operating: 750 cycles min.
5. PCB Retention Pre-solder: 1 LB min.

Environmental:

1. Storage: -40°C to +85°C
2. Operation: -0°C to +70°C

Package: Tray

Order Code:

A-MJH-8-EA-xTP-W2

- G: Au-flash
- P: Au 15u"
- H: Au 30u"

RoHS compliant

Unit: mm

Scale	Free
TOLERANCE	
.X	±0.20
.XX	±0.15
.XXX	±0.10
DIM	TOL
Angle	±5°

Id.	Modification	Date	Name
0	Drawn	05.03.2021	Luca

	Date	Name
Drawn	05.03.2021	Luca
Approved	05.03.2021	Luca

ASSMANN WSW components

Description: Modular Connector RJ45/Jack/8P8C/SIDE ENTRY

ASSMANN WSW-No. A-MJH-8-EA-xTP-W2

Drawing-No. ASS 8854 CO

rev00

Customer-No.

Sheet

SV5044