ASSMANN WSW components GmbH
Auf dem Schüffel 3
D-58513 Lüdenscheid
Fon: +49-2351-554-0
Fax: +49-2351-554-99226

Product Change Notification (PCN)

Issue Date : 08.06.2009
Modification/Revision Date: 08.06.2009

Connector - Sleeves

Change Notification # PCN200906001

Change Description :
Change of product design of bevel from 30° to 44°
Change of order code from AP 90 to AP 90N

Date of Change and Implementation :
08.06.2009

Key Characteristics of Change :
Mechanical

Products Affected :
AP 90

Reason for Change :
New Tool

Response :
No response to this notification is required.
Please contact a ASSMANN WSW components Sales Representative to abtain qualification samples.

Reference Documents / Attachments:
Document: Drawing ASS 0656 COrev01 as attached

ASSMANN WSW components GmbH
Auf dem Schüffel 3
D-58513 Lüdenscheid
Fon: +49-2351-554-0
Fax: +49-2351-554-99226

Product Change Notification (PCN)

PCN Revision History:

Date of Revision: 08.06.2009 **Revision Number: 00**

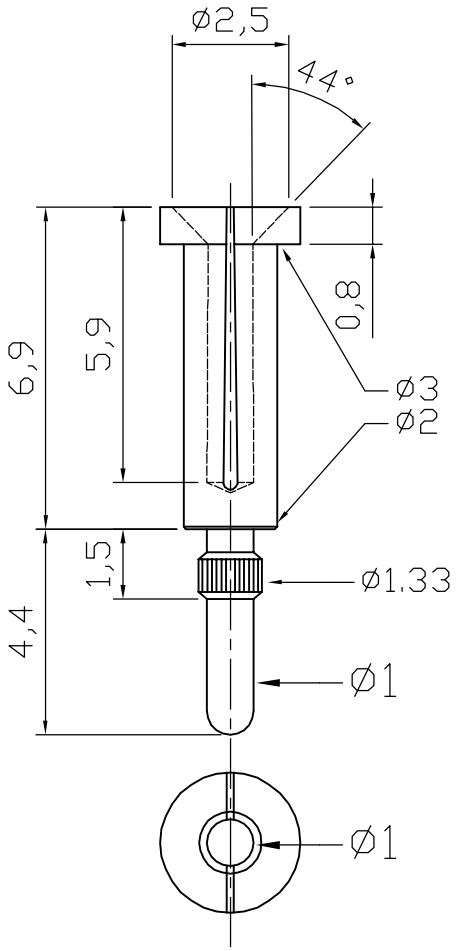

Material:CuZn39Pb3
Plating: Gold Flash

RoHS compliant

Scale	1:1						Date	Name	Customer-No.
TOLERANCE						Drawn	04.06.2009	Dean	
X.	±X					Approved	04.06.2009	Hellwig	ASSMANN WSW-No. AP 90N
X.X	±X								
X.XX	±X								Drawing-No. ASS 0656 CO rev01
DIM	TOL								
X.°	±X°								
X.X°	±X°	①	Drawn	04.06.2009	Dean				Replace / Sheet
Angle	TOL	Id.	Modification	Date	Name				