Auf dem Schüffel 1
D-58513 Lüdenscheid
Tel.: +49-2351 - 5542-00
Fax +49 (2351) 554-861
info@assmann-wsw.com
www.assmann-wsw.com

Product Change Notification (PCN)

Issue Date: 07.10.2020
Modification / Revision Date: 07.10.2020

A-MO 4/4-SF
Modular Connector

Change Notification :	PCN 20201007_AMO44SF
Description of changes :	1. Change of production location 2. New Draw.-No. ASS_6448_COrev03
Reason for Change :	Change of production location
Key Characteristics of Change :	Details see page 3
Products Affected :	A-MO 4/4-SF male / 4P4C
Date of change and Implementation :	Change : 41/2020 Implementation: 07.10.2020
Response :	No response to this notification is required.

PCN Revision History :
Date of Revision : 07.10.2020 Revision Number: 00

Auf dem Schüffel 1
D-58513 Lüdenscheid
Tel.: +49-2351 - 554-200
Fax +49 (2351) 554-861
info@assmann-wsw.com
www.assmann-wsw.com

Product Change Notification(PCN)

Issue Date: 07.10.2020
Modification / Revision Date: 07.10.2020

Reference Documents / Attachments:
Document: Drawing

ASSMANN WSW P/N	Drawing Number		
A-MO 4/4-SF	ASS_6448_COrev02	⟷	ASS_6448_COrev03

PCN Revision History :
Date of Revision : 07.10.2020 Revision Number: 00

ASSMANN wsw components

Auf dem Schüffel 1
D-58513 Lüdenscheid
Tel.: +49-2351 - 554-200
Fax +49 (2351) 554-861
info@assmann-wsw.com
www.assmann-wsw.com

Product Change Notification(PCN)

Issue Date: 07.10.2020
Modification / Revision Date: 07.10.2020

A-MO 4/4-SF — Old version

Tolerance

Scale	Free
TOLERANCE	
X.X	±0.20
X.XX	±0.10
X.XXX	±0.05
DIM	TOL
X.°	±3°
X.X°	±1.0°
Angle	TOL

NOTES

Specifications:

Material:
Housing: Poly Carbonate(PC) UL94V-2
Contact: Phosphor Bronze with 2 prongs
Plating: 6u" gold plated
100u" Nickel under plated
Operating temperature: -40°C to +125°C

Electrical:
Current rating: 250V AC max. at 2A
Dielectric: 500V AC
Insulation resistance: 500MΩ
Termination resistance: 35mΩ max after environmental tests
Tensile strength: 20 LBS (89N) min.
Durability: 500 mating cycles

Complies with FCC68/F
② Wire gauge: 30AWG-24AWG Stranded wire
Cable OD size: flat cable 2.5x5.0±0.02mm
Wire size: 0.95±0.05mm

Appearance of product

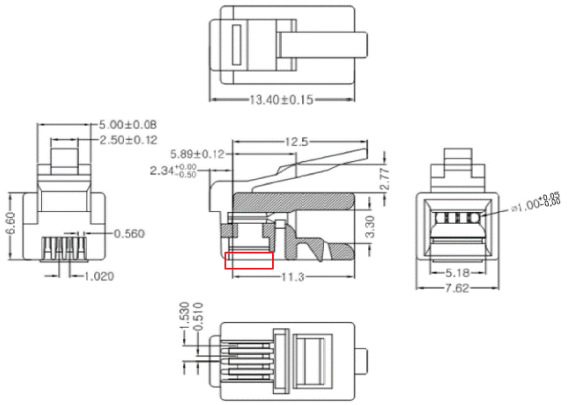

A-MO 4/4-SF — New version

Tolerance

Scale	Free
TOLERANCE	
.X	±0.20
.XX	±0.10
.XXX	±0.05
DIM	TOL
X.°	±2°
Angle	TOL

NOTES

③ NOTES:

MATERIAL
Housing: PC UL94V-2
Contact: Brass with 2 prongs
Plating: Gold (see Ordercode)
50 µ" Nickel under plated

ELECTRICAL
Current rating: 1.5A
Withstand Voltage: 1000 VAC/minute
Insulation Resistance: 500MΩ
Contact Resistance: 20mΩ max.
Tensile strength: 50N Min

ENVIRONMENTAL
Operating temp.: -40°C to + 85°C
Durability: 750 cycles
Wire gauge: 30AWG-24AWG Stranded wire
Cable OD size: flat cable 2.5*5.0mm MAX
Wire size: 0.95±0.05mm

Order Code: A-MO 4/4-SF-x
empty =Au 6u"
GF =Au-flash

Appearance of product

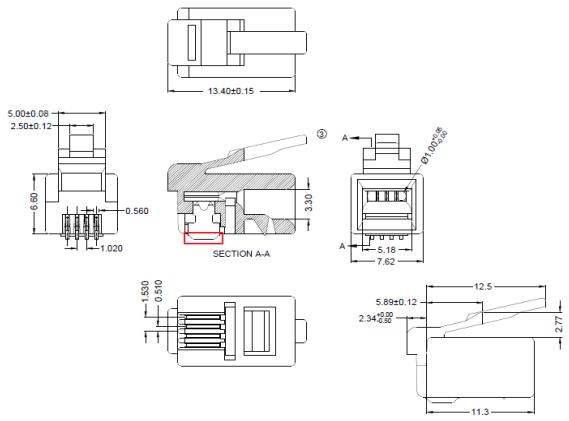

For detail, please take attached new drawing: ASS_6448_COrev03 for reference

PCN Revision History :
Date of Revision : 07.10.2020 Revision Number: 00

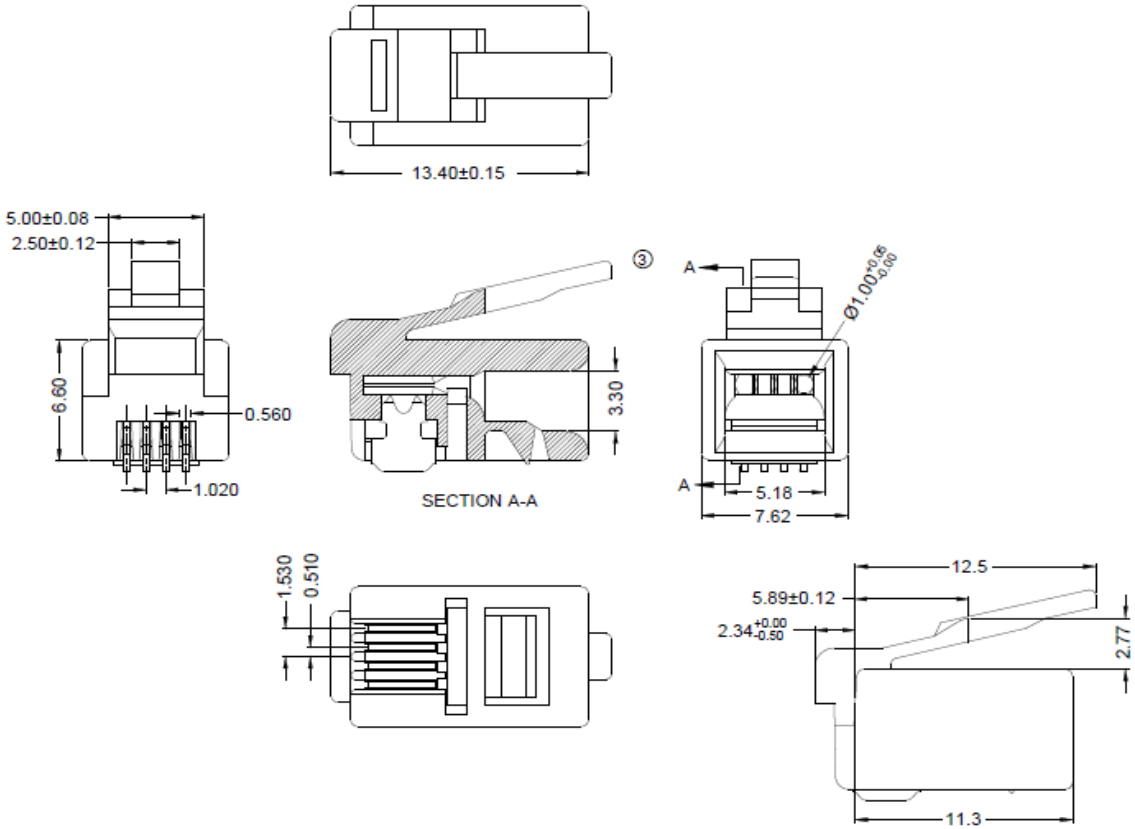

③ NOTES:

MATERIAL

Housing:	PC UL94V-2
Contact:	Brass with 2 prongs
Plating:	Gold (see Ordercode)
	50 µ" Nickel under plated

ELECTRICAL

Current rating:	1.5A
Withstand Voltage:	1000 VAC/minute
Insulation Resistance:	500MΩ
Contact Resistance:	20mΩ max.
Tensile strength:	50N Min

ENVIRONMENTAL

Operating temp.:	-40°C to + 85°C
Durability:	750 cycles
Wire gauge:	30AWG-24AWG Stranded wire
Cable OD size:	flat cable 2.5*5.0mm MAX
Wire size:	0.95±0.05mm

Order Code: A-MO 4/4-SF-x
- empty =Au 6u"
- GF =Au-flash

RoHS compliant

Unit:mm

Scale	Free
TOLERANCE	
.X	±0.20
.XX	±0.10
.XXX	±0.05
DIM	TOL
X.°	±2°
Angle	TOL

Id.	Modification	Date	Name
③	Update drawing	14.09.2020	Luca
②	Add cable wire size information	03.04.2019	Amy
①	Update the dimensions	03.05.2016	Amy
⓪	Drawn	26.05.2014	Ray

	Date	Name
Drawn	26.05.2014	Ray
Approved	14.09.2020	Luca

Description: Modular Connector male / 4P4C / UTP

ASSMANN WSW-No. A-MO 4/4-SF-x ③

Drawing-No. ASS 6448 CO

rev03

Customer-No.

SHEET 1 / 1

ASSMANN WSW components

SV4899