Auf dem Schüffel 1
D-58513 Lüdenscheid
Tel.: +49-2351 - 5542-00
Fax +49 (2351) 554-861
info@assmann-wsw.com
www.assmann-wsw.com

PRODUCT CHANGE NOTIFICATION (PCN)

ISSUE DATE: 20.10.2021
MODIFICATION / REVISION DATE: 20.10.2021

V2000x
Profile heat sink, black anodized, with solder pins

CHANGE NOTIFICATION:	PCN-20211020_V2000x
DESCRIPTION OF CHANGES:	CHANGE OF DATA SHEET New Draw.-No. ASS_0869_HSrev05
REASON FOR CHANGE:	CHANGE OF PRODUCT DIMENSIONS, TOLERANCES
KEY CHARACTERISTICS OF CHANGE:	Details see page 3
PRODUCTS AFFECTED:	V2000x
DATE OF CHANGE AND IMPLEMENTATION:	CHANGE: WEEK 42/ YEAR 2021 IMPLEMENTATION: 20.10.2021
RESPONSE:	NO RESPONSE TO THIS NOTIFICATION IS REQUIRED

PCN REVISION HISTORY:
DATE OF REVISION: 20.10.2021 REVISION NUMBER: 00

Auf dem Schüffel 1
D-58513 Lüdenscheid
Tel.: +49-2351 - 554-200
Fax +49 (2351) 554-861
info@assmann-wsw.com
www.assmann-wsw.com

PRODUCT CHANGE NOTIFICATION (PCN)

ISSUE DATE: 20.10.2021
MODIFICATION / REVISION DATE: 20.10.2021

REFERENCE DOCUMENTS / ATTACHMENTS:
DOCUMENT: DRAWING

ASSMANN WSW P/N	Drawing Number		ASSMANN WSW P/N	Drawing Number
V2000x	ASS_0869_HSrev04	↔	V2000x	ASS_0869_HSrev05

PCN REVISION HISTORY:
DATE OF REVISION: 20.10.2021 REVISION NUMBER: 00

Auf dem Schüffel 1
D-58513 Lüdenscheid
Tel.: +49-2351 - 554-200
Fax +49 (2351) 554-861
info@assmann-wsw.com
www.assmann-wsw.com

PRODUCT CHANGE NOTIFICATION (PCN)

ISSUE DATE: 20.10.2021
MODIFICATION / REVISION DATE: 20.10.2021

V2000x OLD VERSION	V2000x NEW VERSION
Appearance: 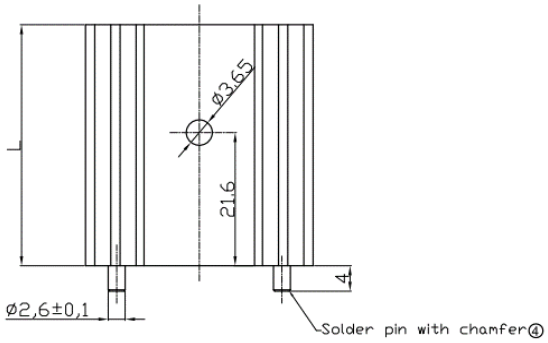	Appearance: 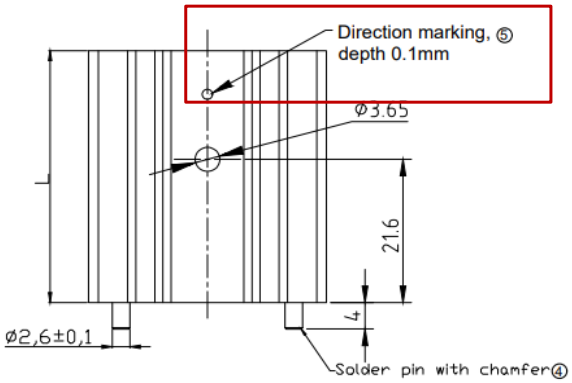

FOR DETAIL, PLEASE TAKE ATTACHED NEW DRAWING: ASS_0869_HSrev05 FOR REFERENCE

PCN REVISION HISTORY:
DATE OF REVISION: 20.10.2021 REVISION NUMBER: 00

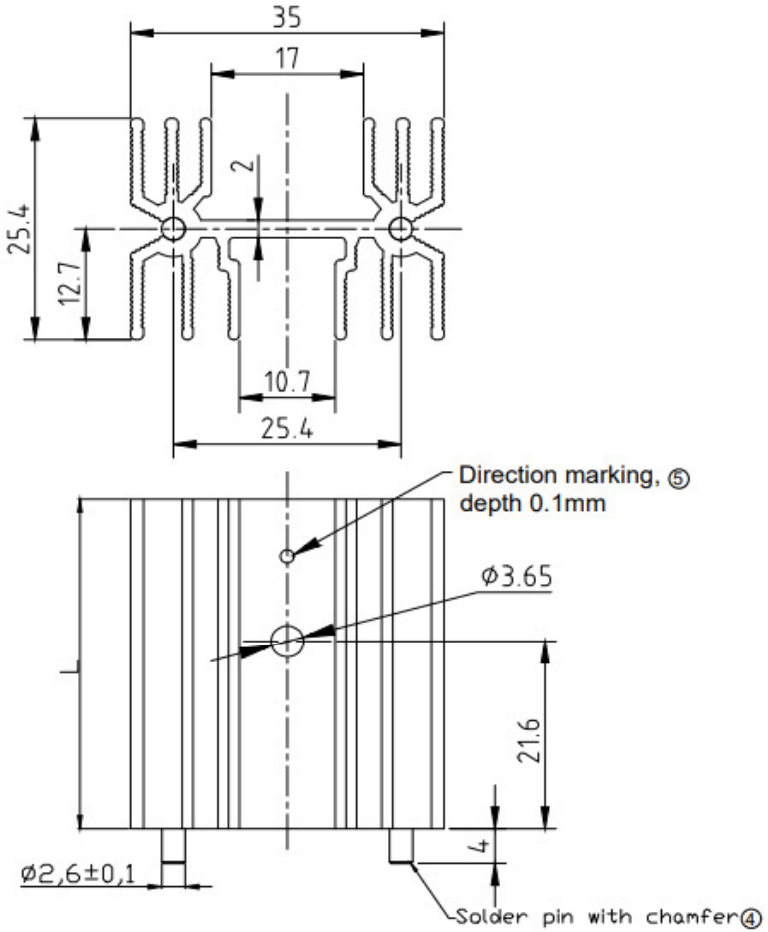

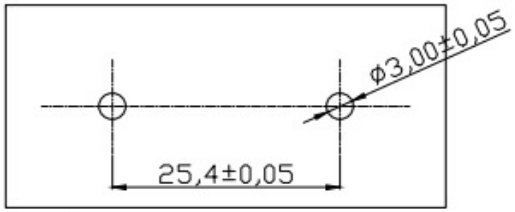

④ Recommended PCB Layout

Notes
Material : AL 6063
Finished : Black Anodized

Option	L	Thermal resistance(K/W)
V2000W	25	6.5
V2000X	38	5
V2000Y	50	4

RoHS compliant
Unit: mm

Scale	Free
TOLERANCE	
UNIT	±0.2
DIM	TOL
X.°	±X°
X.X°	±X°
Angle	TOL

Id.	Modification	Date	Name		Date	Name
⑤	Add the direction marking	20.10.2021	Segal	Drawn	11.08.2009	Dean
④	Add PCB layout information	24.02.2014	Amy	Approved	20.10.2021	Segal
③	Fill profile	23.06.2010	Dean			
②	Modify drawing layout	10.03.2010	Dean			
①	Drawn	11.08.2009	Dean			

ASSMANN WSW components

Customer-No.

ASSMANN WSW-No. V2000x

Drawing-No. ASS 0869 HS rev05

Replace

Sheet